REV-NO.		DATE	Engineer

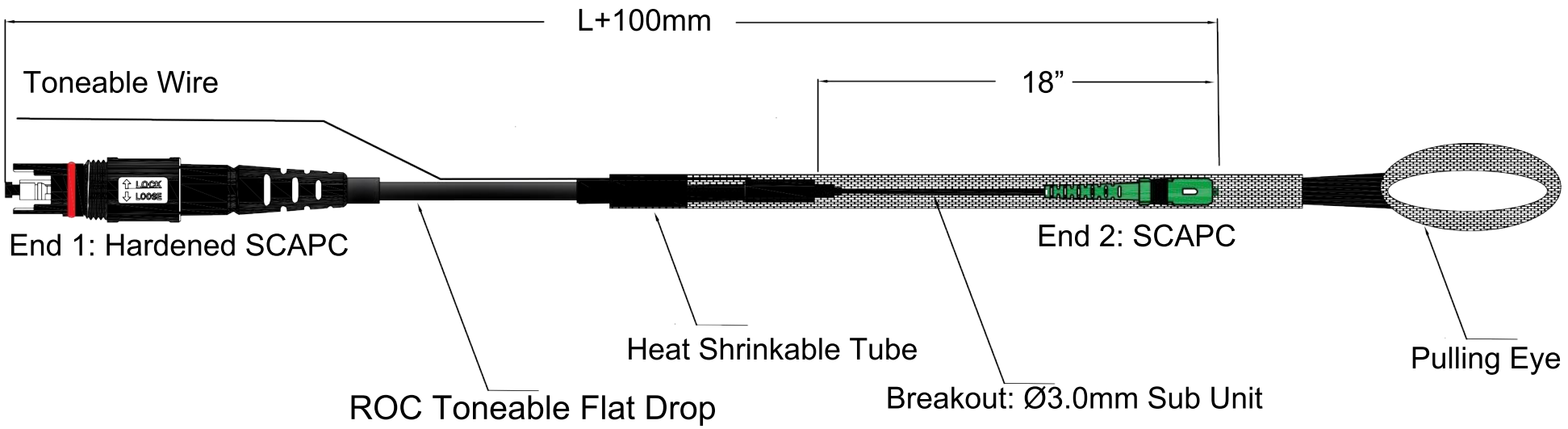

Description: ROC Toneable Flat Drop SM G.657.A1 (end1) Hardened SC/APC to (end2) SC/APC 18" Breakout with Pulling Eyes		Description: ROC Toneable Flat Drop SM G.657.A1 1Fiber 900μm HDPE 6.6*3.0mm Black		
Technical Parameters		**Technical Parameters**		
Item	Parameter	NO.	Content	Parameter
End 1	Hardened SCAPC	1	Toneable Wire	24 AWG
End 2	SCAPC	2	Outer Jacket	HDPE
Insertion Loss (dB) @1310&1550nm	Typical<0.15, Max<0.3	3	Strength Member	FRP
Return Loss (dB)	>60	4	Fiber	0.9mm Tight Buffer G657A1
Pulling Force of Hardened Connector At 0°	450N			
Pulling Force of Hardened Connector At 90°	67N			
Ingress Protection	IP68			
Operation Temperature	-40~+70℃	Operation Temperature		-40~+70℃

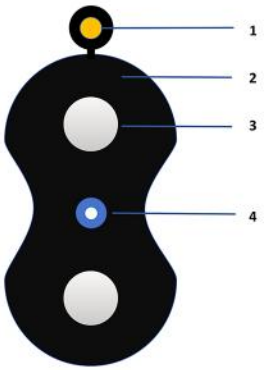

Fiber Optic Connectivity RAYOPTIC COMM Rayoptic Communication Co., Ltd

DESIGNED BY: Jack Li	DATE: 08-12-2022	CUSTOMER: XXXX	MATERIAL:
APPROVED BY: Wei Xiong	DATE: 08-12-2022	PART NAME: Flat Drop Assembly	SHRINKAGE:
Toneable Flat Drop SM G.657.A1 (end1) Hardened SC/APC to (end2) SC/APC 18" Breakout with Pulling Eye		PART NO: FDA-R-H-SA-P-T-xxxxF	SCALE: 1:0.5 REV: 01
		JOB NO:	SHEET NO: 1/1